RÖSLER®
finding a better way ...

Rotary vibrators

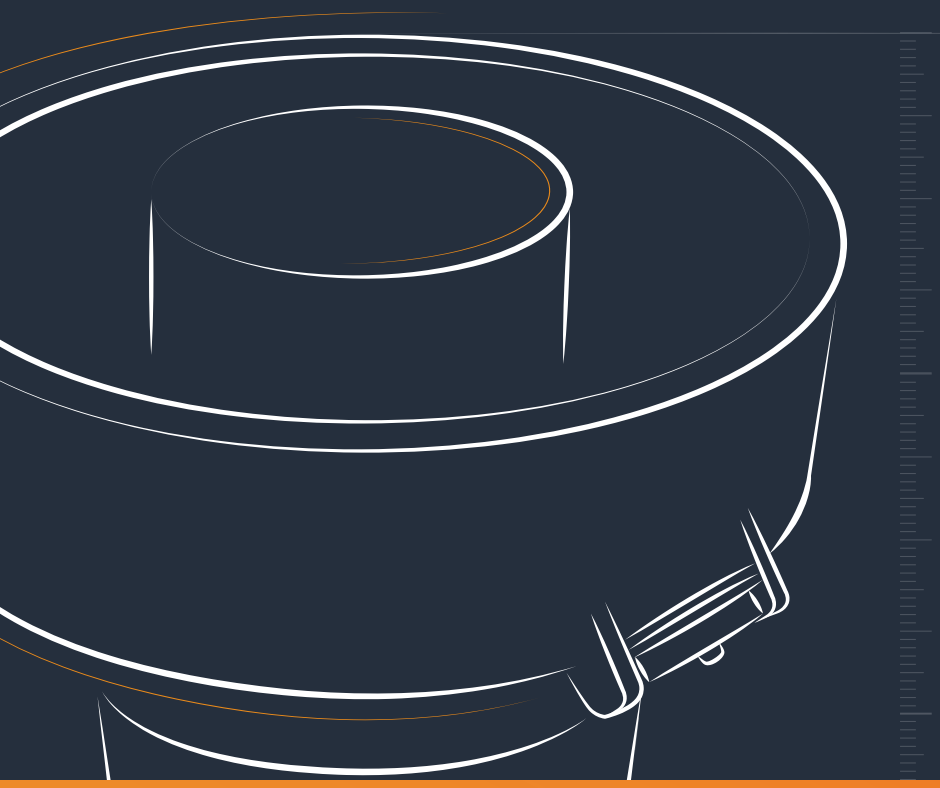

www.rosler.com

Mass Finishing

High-performance equipment and innovative technologies – productive and cost-effective

Shot Blasting

Customer-oriented equipment technology and intelligent process solutions – long-lasting and energy-efficient

AM Solutions

Comprehensive solutions for additive manufacturing, especially 3D post processing equipment

›80 More than 80 years of **experience**

15 locations –
over **150** distributors –
over **1,500** employees **across the globe**

Worldwide **Customer Experience Center**

More than **15,000**
different types of media and compounds

Our technical service –
round-the-clock support

RÖSLERACADEMY
Technology. Training. Innovation.

Transfer of professional knowledge
by certified trainers

Contents

Rösler rotary vibrators are setting new standards	4
Media and compounds	5
Rotary vibrators – technical details	6 - 7
Rotary vibrator, model range R	8 - 9
Rotary vibrator, model range EC	10 - 11
Rotary vibrator, model range Euro	12 - 13
Rotary vibrator, model range A	14 - 15
Rotary vibrators without inner dome	16 - 17
Combined washing/drying system WTA	18 - 19
2- and 3-batch systems	20 - 21
Separation systems	22
Extras	23
Magnetic separation	24 - 25
Electrical controls and dosing technology	26
Noise protection systems	27
Maximum efficiency through automation	28 - 29
Customer Experience Center Mass Finishing	30
Rösler Academy	31

RÖSLER ROTARY VIBRATORS ARE SETTING NEW STANDARDS

A technology that pays off quickly!

Because of their sturdy design and ease of operation, Rösler rotary vibrators are true all-round finishing systems. Irrespective of what finishing process you run, rotary vibrators allow the hassle-free treatment of work pieces in different shapes, sizes and quantities. Complemented by suitable work piece loading/unloading and post processing equipment, rotary vibrators can easily be upgraded to fully automatic finishing lines.

Functional principle

A special, centrally mounted vibratory motor induces precisely defined vibrations into the processing bowl. The resulting spiral movement of the media/work piece mix in the processing bowl generates the distinctive rubbing motion of the media on the work pieces. This dynamic action is supported by the addition of water and different chemical compounds to maintain a stable and repeatable process. Depending on the machine type, the separation of the finished work pieces from the media takes place directly in the machine with a separation flap and a separation screen: The screen guides the work pieces to the machine exit or directly to a post processing system like a dryer. The media remains in the processing bowl.

Rösler rotary vibrator linked with a vibratory rinsing station, dryer and rotary storage table

Fields of application

Rotary vibrators are true all-round machines: They can be used for deburring, surface grinding, edge radiusing, cleaning, descaling, de-oiling and polishing of stampings, castings, forgings as well as custom-bent, saw-cut and machined components.

The mass finishing technology can be utilized for work pieces made from metal, plastic, ceramic, rubber, wood, stone and glass for all kinds of finishing targets. The work piece spectrum ranges from delicate small parts to massive and rugged large components.

MEDIA AND COMPOUNDS

In addition to our machine program, we also offer the most comprehensive range of media and compounds in the world. All our consumable products have been developed and produced in-house with „Made in Germany“ quality. With over 80 years of experience in the field of surface finishing we can provide our customers with tailormade processes for new applications and solutions for product improvement and cost reductions.

Stable and repeatable finishing processes are our specialty.

The world’s largest range of media and compounds

With around 15,000 products our portfolio of consumables is the largest in the world. It includes ceramic and plastic grinding and polishing media, compounds and process water cleaners. All our consumables can be individually adapted to the needs and requests of our customers.

Our ceramic media production

Quality

Our production complies with the most stringent environmental standards and is subject to strict quality controls per DIN EN ISO 9001 and 50001.

Excellent product availability

Our central warehouse in Germany stocks more than 8,000 tons of media and compounds. In addition, our global network of branches and many of our channel partners maintain warehouses with consumables close to our customers.

ROTARY VIBRATORS – TECHNICAL DETAILS

Rotary vibrators made by Rösler

A functional design, the use of high-grade materials and a high-quality production. These are characteristics that guarantee a long equipment life. Our engineers continuously work on further improving the performance of our rotary vibrators and expanding their fields of application.

Convincing engineering ...

1 Processing bowl

- Undergoes a heat treatment / stress-relief annealing process after welding
- Large access door allows easy and quick setting of the imbalance weights
- Different processing bowl versions ensure optimal adaptation to different finishing applications

2 Internal separation

Only for model range EC, Euro, Euro-HS and Euro-KP:

- The vibratory motion on the separation screen allows effective separation of the finished work pieces from the media
- The media falls back into the processing channel below the separation screen
- The finished work pieces are transported on the separation screen towards the machine exit

2a Discharge of undersized media

Optional for model range EC, Euro and Euro-HS:

- Special screen segment for discharging undersized media that is no longer suitable for the process

3 Excellent wear lining

All our wear linings are made in-house. Compared to the standard materials available in the market, our liners – specially adapted to different applications – have an up to 3 times longer service life. We also offer a reline service for worn processing bowls. We are using the following materials:

- Hot-poured polyurethane
- Sprayed polyurethane
- Glued-in rubber or polyurethane

4 Media unload plug

- Dual function: Serves for discharging media and as main drain of the process water
- Optional built-in undersize media discharge

5 Process water drains in the bottom of the processing bowl

- Complementary to the main process water drain
- Recommended for special finishing processes such as Keramo-Finish®, Isotropic Superfinish (ISF), ball burnishing, cleaning and pickling processes

6 Solid machine base

- Sturdy welded machine base with coil spring retainers
- Guarantees excellent positional stability of the processing bowl

7 Controls

Use of the latest PLC technology allows:

- Central process control and monitoring of all important functions
- Easy interlinking with preceding and subsequent manufacturing operations

8 Special vibratory drive

- Direct drive special Rosler vibratory motor – rugged, heavy duty design
- Highly efficient transfer of the vibratory energy into the processing bowl
- Vibration resistant anchoring of the vibratory motor in the center of the processing bowl (double conical mounting for easy installation)
- 2 standard speeds: 1,500 and 1,000 RPM at 50 Hz
- Optional: Speed adjustment with frequency inverter provides more flexibility for all processing and separation

9 Setting of the imbalance weights

- Infinitely adjustable angle between upper and lower weights
- Motor shaft mounted dial disc for easy setting of weight angels
- Easy adjustment of the vibratory amplitude by adding additional weights

10 Water and compound dosing system

- Operation with fresh water: Separate dosing of water and compound
- Optional: Recycling of the process water

For additional information about separation systems, extras and peripheral equipment please refer to pages 22 to 27.

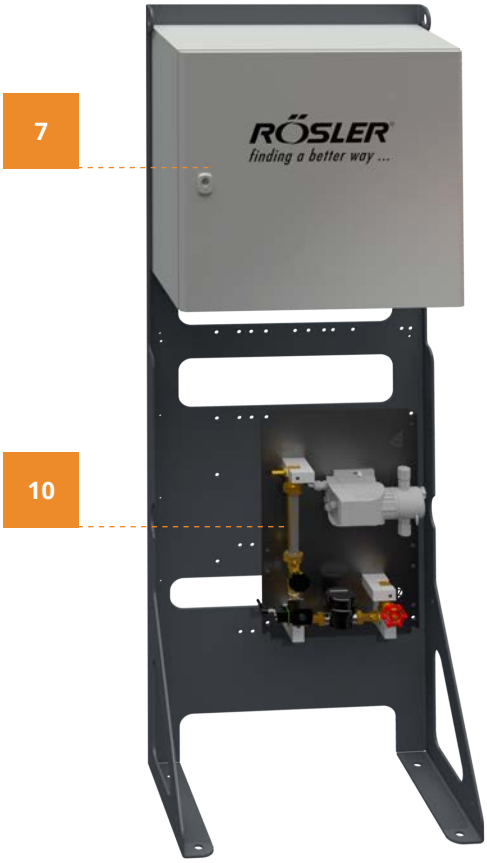

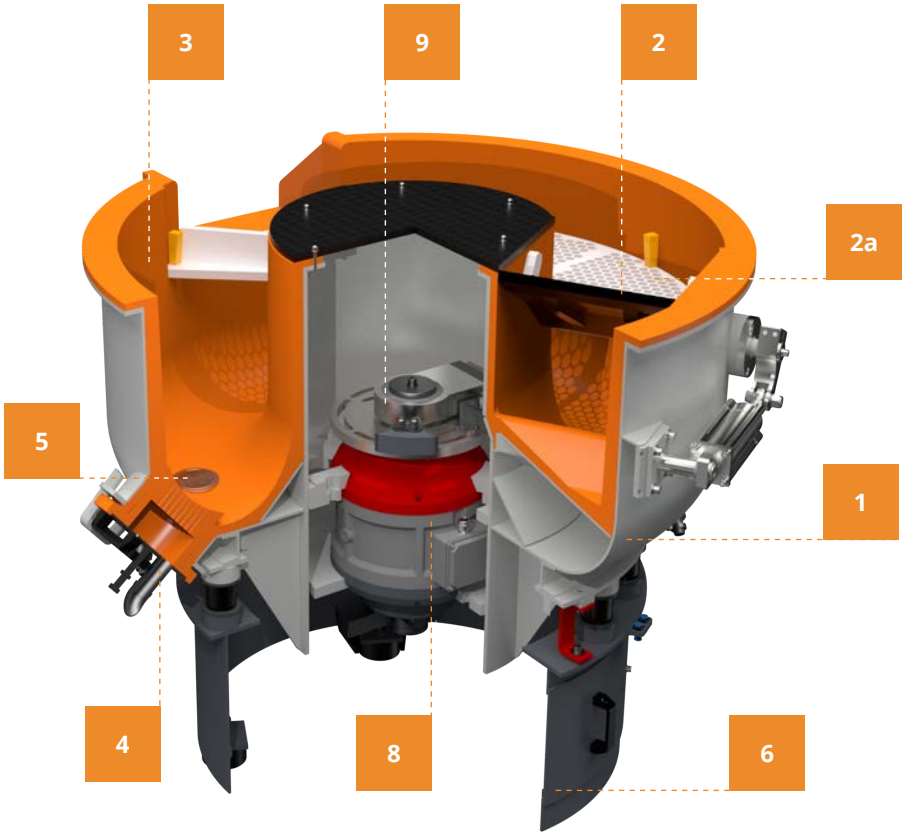

ROTARY VIBRATOR, MODEL RANGE R

The basic machine

Rotary vibrators of the model range "R" are equipped with a **flat-bottom processing bowl**. They are ideal for finishing **large, bulky,** but also **delicate work pieces**. The work pieces are protected by being perfectly embedded in the processing media. Components that must not touch each other during the process, can be **individually treated** in chambers created by so-called "paddle wheel" dividers. The finished work pieces are normally removed by hand. Optionally the machine can be equipped with a bottom unload gate that allows the **complete discharge** of the media/work piece mix. In this case the separation of the work pieces from the media takes place externally, for example, with an external vibratory screening machine.

Technical details

- Flat-bottom processing bowl
- Manual removal of the finished work pieces; reversing the rotational direction of the vibratory motor causes the work pieces to float on top of the media
- Rösler two-speed vibratory motor with double conical mounting (1,500 und 1,000 RPM at 50 Hz); equipped with grease lubricated special heavy duty bearings
- Adjustable imbalance weights allow for setting different processing intensities
- Hot-poured PUR polyurethane lining with extra thickness in critical wear areas
- Flexible electrical controls and dosing technology

Rösler
rotary vibrator R 220

Special machine versions

HS (High-Speed)

- Special Rösler vibratory motor Power+; the variable working amplitude can be as high as 10 mm
- Central lubrication (auto-lube)
- Processing bowl made from special steel
- Re-enforcing ribs on the outside of the processing bowl
- Hot-poured PUR polyurethane lining with double thickness in the bottom of the processing bowl

KP (Ball burnishing)

- High performance machine version specially designed for ball burnishing or pressure deburring with steel / stainless steel media
- More powerful vibratory drive system
- Processing bowl equipped with re-enforcing ribs
- Spray-on polyurethane lining for optimum energy transfer and wear protection
- Recommended: Suction process water extraction system and splash-guard cover

Application-specific processing bowl versions

For special finishing requirements and to achieve the best-possible processing results, we can provide special processing bowl channel geometries:

E-PUR (polyurethane version)

- Outer wall of the processing bowl equipped with a cast triangular wedge made from PUR polyurethane
- Accelerates and optimizes the finishing of small, lightweight parts
- Also suitable for part-on-part processing

E-M

- The outer wall of the steel construction of the processing bowl is curved
- Optimizes the spiral motion of the media/work piece mix
- The ideal bowl geometry for lightweight work pieces that tend to float on top of the media during the finishing process

2-E

- The outer and inner wall of the steel construction of the processing bowl are curved
- Optimizes the spiral motion of the media/work piece mix
- The ideal bowl geometry for lightweight, delicate work pieces

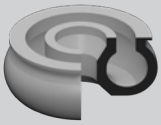

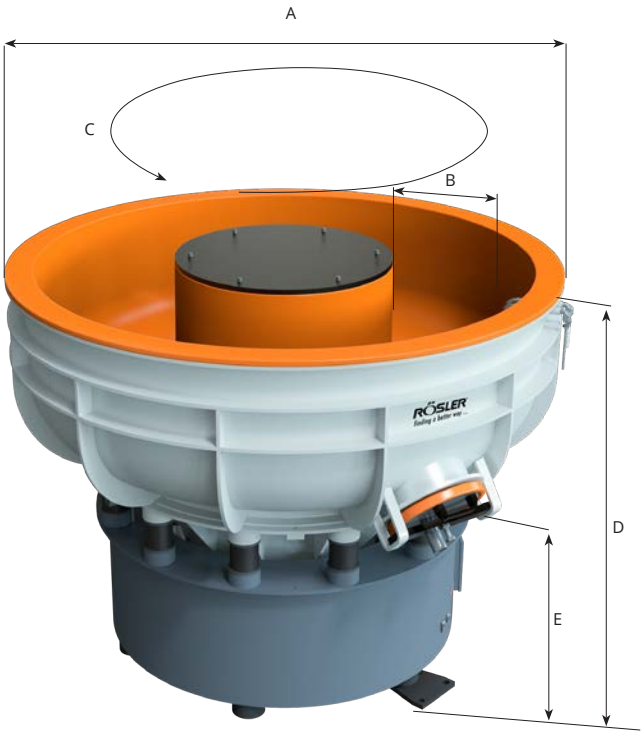

Technical data

Model range:	R 125	R 220	R 320	R 420	R 620	R 780	R 1050	R 1400	R 2600	R 3500
Total bowl volume (l)	125	220	320	420	620	780	1,050	1,400	2,600	3,500
A – Outer diameter max. (mm)	910	1,190	1,350	1,520	1,695	1,805	1,805	2,210	2,520	2,905
B – Width of processing channel (mm)	210	250	330	360	430	435	455	650	765	890
C – Overall length of processing channel (mm)	1,950	2,600	2,840	3,250	3,510	3,815	3,750	4,400	4,900	5,660
D – Machine height - upper edge of processing bowl (mm)	1,010	1,070	1,070	1,235	1,200	1,225	1,225	1,385	1,780	1,765
E – Height of media unload plug (mm)	630	645	595	705	625	600	550	675	840	815
Connected load (kW)	0.75	3.0	3.0	7.5	7.5	7.5	7.5	12.5	15.0	22.0

Please contact us for additional technical data and specifications

ROTARY VIBRATOR, MODEL RANGE EC

For operator supported work piece separation

Because of their ingenious bowl shape, the EC machines are the most versatile rotary vibrators in the Rösler product range: **The relatively shallow, quarter turn incline** of the processing channel allows the optimal processing and separation of **small as well as large and bulky work pieces**. Even **delicate parts** can be finished in our EC range.

Separation technology

Depending on their shape, size and fragility, not all work pieces can be separated in automatic mode. For this reason, Rösler offers a unique, easy-to-operate solution using a **slide-in separation gate**. Models 320 and larger can optionally be equipped with a pneumatic separation flap that is activated by the operator.

Rösler
rotary vibrator R 125 EC

Work piece separation supported by the operator

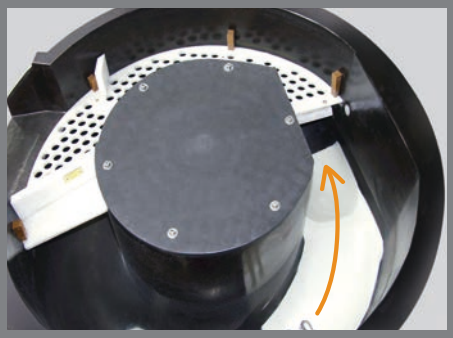

Shallow, short incline of the processing channel

Manual slide-in separation gate inserted for separation

Pneumatically activated separation flap

Technical details

- Relatively shallow and short incline of the processing channel
- Slide-in separation gate or pneumatically activated separation flap
- Large separation screen; can be exchanged without the need for special tools
- Rösler two-speed vibratory motor with double conical mounting (1,500 und 1,000 RPM at 50 Hz); equipped with grease lubricated special heavy duty bearings
- Hot-poured PUR polyurethane lining with extra thickness in critical wear areas
- Flexible electrical controls and dosing technology

Extras

- Bottom drains
- Undersize media separation in the media unload plug or as separate screen segment
- Various noise protection systems

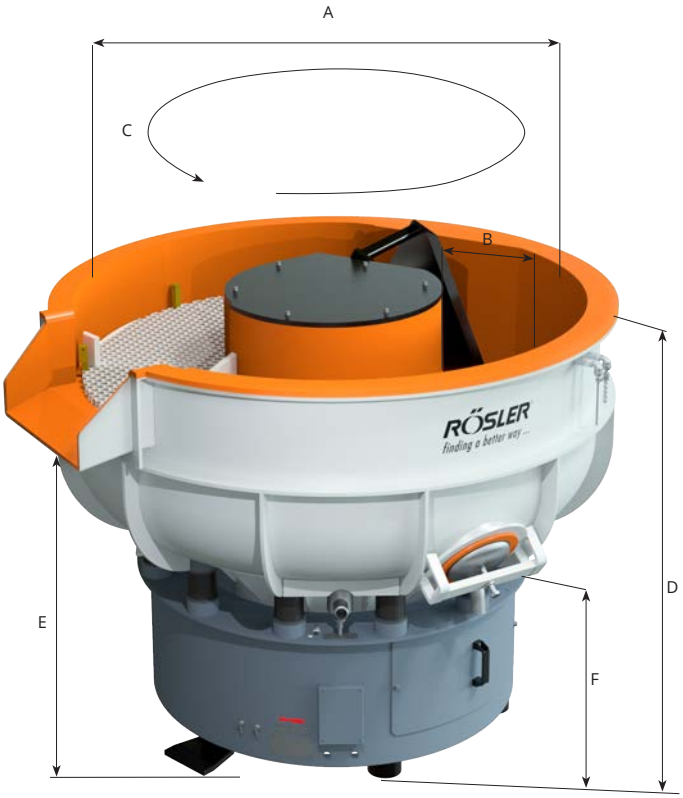

Technical data

Model range:	R 125 EC	R 220 EC	R 320 EC	R 420 EC	R 620 EC	R 780 EC
Total bowl volume (l)	125	220	320	420	620	780
A - Outer diameter max. (mm)	910	1,200	1,280	1,520	1,695	1,805
B - Width of processing channel (mm)	210	260	290	355	430	430
C - Overall length of processing channel (mm)	1,970	2,630	2,780	3,300	3,450	3,820
D - Machine height - upper edge of processing bowl (mm)	1,105	1,115	1,210	1,240	1,235	1,260
E - Work piece discharge height (mm)	890	890	990	1,010	985	1,010
F - Height of media unload plug (mm)	660	640	650	675	600	575
Connected load (kW)	0.75	3.0	3.0	3.0	7.5	7.5

Please contact us for additional technical data and specifications

ROTARY VIBRATOR, MODEL RANGE EURO

For fully automatic work piece separation

The EURO model range is ideal for **fully automated inter-linked finishing processes** thanks to the half turn incline of the processing bowl and the optional Rösler reversing weight feature of the drive system.

Automatic "gate clearing" in the processing channel with reversing imbalance weights

By reversing the rotational direction of the vibratory motor, the imbalance weights are flipping into the reverse position, causing the media mass to move backwards. This removes any media from the contact face for the separation flap in the processing channel and, thus, prevents any work pieces or media getting jammed by the separation flap.

Rösler
rotary vibrator R 620 Euro

Automatic separation

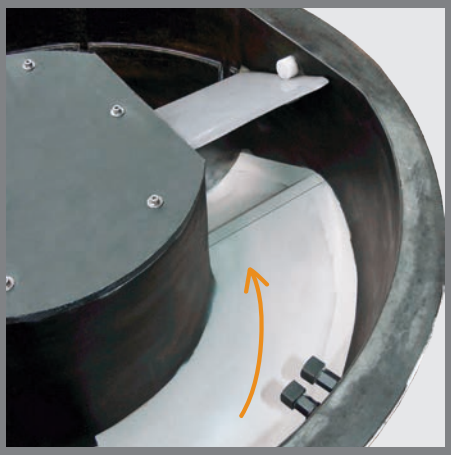

Quarter turn full height incline

Steep-drop: Supports the separation of flat work pieces and prevents them from sticking together

Soft-slide drop: Ensures delicate work pieces remain embedded in the processing media, reducing potential part on part impingement

Technical details

- Quarter turn full height incline with soft-slide drop, adjustable slide/drop intensity
- Pneumatically activated separation flap
- Large separation screen; can be exchanged without the need for special tools
- Rösler two-speed vibratory motor with double conical mounting (1,500 und 1,000 RPM at 50 Hz); equipped with grease lubricated special heavy duty bearings
- Hot-poured PUR polyurethane lining with extra thickness in critical wear areas
- Flexible electrical controls and dosing technology

Extras

- Bottom drains
- Undersize media separation in the media unload plug or as separate screen segment
- Various noise protection systems
- Automatic "Gate clearing" in the processing channel with reversing imbalance weights
- Rinsing system for the separation flap

Special machine versions

HS (High-Speed)

- Special Rösler vibratory motor Power+; the variable working amplitude can be as high as 10 mm
- Central lubrication (auto-lube)
- Processing bowl made from special steel
- Re-enforcing ribs on the outside of the processing bowl
- Hot-poured PUR polyurethane lining with extra thickness in critical wear areas

KP (Ball burnishing)

- High performance machine version specially designed for ball burnishing or pressure deburring with steel / stainless steel media
- More powerful vibratory drive system
- Processing bowl equipped with re-enforcing ribs
- Hot-poured PUR polyurethane lining with extra thickness in critical wear areas
- Recommended: Suction process water extraction system and splash-guard cover

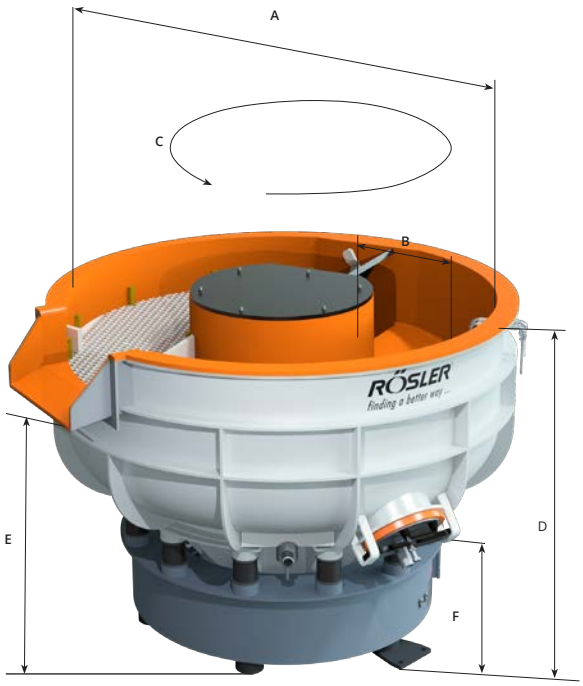

Technical data

Model range:	R 125 Euro	R 220 Euro	R 320 Euro	R 420 Euro	R 620 Euro	R 780 Euro	R 1050 Euro	R 1500 Euro
Total bowl volume (l)	125	220	320	420	620	780	1,050	1,500
A – Outer diameter max. (mm)	910	1,190	1,350	1,520	1,695	1,805	1,800	2,130
B – Width of processing channel (mm)	215	260	325	350	430	440	460	525
C – Overall length of processing channel (mm)	2,050	2,725	3,050	3,500	3,800	4,100	4,100	4,800
D – Machine height - upper edge of processing bowl (mm)	1,110	1,180	1,210	1,355	1,225	1,375	1,395	1,530
E – Work piece discharge height (mm)	890	965	990	1,150	985	1,125	1,135	1,160
Height of media unload plug (mm)	650	640	615	705	500	600	550	580
Connected load (kW)	0.75	3.0	3.0	7.5	7.5	7.5	7.5	12.5

Please contact us for additional technical data and specifications

ROTARY VIBRATOR, MODEL RANGE A

Designed for magnetic separation

The A range of rotary vibrators is in a class of its own. This machine range, in combination with the powerful MS/E-V magnetic separator, is designed for efficient processing and separation of **ferro-magnetic work pieces**. The **automated finishing process** can be controlled and monitored with easy-to-operate system controls.

Technical details

- Processing bowl equipped with horizontal and vertical re-enforcing ribs
- Processing channel with special half turn, extra height incline for the magnetic work piece discharge with high performance MS/E-V magnetic separators
- Rösler two-speed vibratory motor with double conical mounting (1,500 und 1,000 RPM at 50 Hz); equipped with grease lubricated special heavy duty bearings
- Hot-poured PUR polyurethane lining with extra thickness in critical wear areas
- Flexible electrical controls and dosing technology

Extras

- Bottom drains
- Undersize media separation in the media unload plug
- Various noise protection systems

Rösler rotary vibrator R 780 A with belt magnetic separator, model range MS/E-V

You find technical details about the MS/E-V magnetic separator under chapter "Magnetic separation" on page 24.

Special machine version

HS (High-Speed)

- Special Rösler vibratory motor Power+; the variable working amplitude can be as high as 10 mm
- Central lubrication (auto-lube)
- Processing bowl made from special steel
- Re-enforcing ribs on the outside of the processing bowl
- Hot-poured PUR polyurethane lining with double thickness in the bottom of the processing bowl

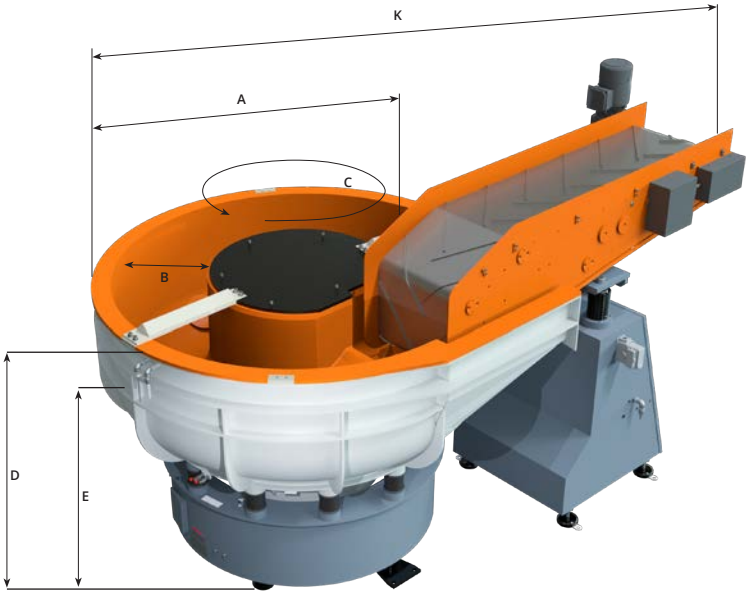

Technical data

Model range:	R 780 A	R 1050 A
Total bowl volume (l)	780	1,050
A – Outer diameter max. (mm)	1,805	1,805
B – Width of processing channel (mm)	435	465
C – Overall length of processing channel (mm)	4,100	4,100
D – Machine height - upper edge of processing bowl (mm)	1,275	1,375
E – Work piece discharge height (mm)	1,045	1,105
K – Total length, including magnetic separator (mm)	3,000	3,000
Connected load (kW)	7.5	7.5

Please contact us for additional technical data and specifications

ROTARY VIBRATORS WITHOUT INNER DOME

For treating work pieces that must not touch during the finishing process

The work pieces are firmly clamped to the vibrating processing bowl. This machine type is deally suited fr processing of single **large, geomerically complex and delicate components.** But several smaller components can also be treated by mounting them to a single work piece fixture. Rotary vibrators without inner dome, generating a high process intensity and repeatable finishing results, can be used for a wide range of applications.

Technical details

- By way of a special fixture the work pieces are directly clamped to the processing bowl
- The processing media is continuously flowing around the fixtured work piece
- High processing intensity and finishing of complex internal work piece areas
- Rösler two-speed vibratory motor with double conical mounting (1,500 und 1,000 RPM at 50 Hz)
- The media unload plug can be opened/closed without any special tools
- Hot-poured PUR polyurethane lining with extra thickness in critical wear areas

Extras

- Automatic media return system
- Various noise protection systems

Rösler
rotary vibrator R 420 DL

Special high intensity model

R 150 DL-2

High performance rotary vibrator without inner dome

- Two special Rösler high speed vibratory motors (3,000 RPM at 50 Hz)
- Adjustable mounting angle of the two motors
- Infinitely adjustable motor speed with frequency inverter
- Automatic change of rotational direction of the two motors
- Hot-poured PUR polyurethane lining with extra thickness in critical wear areas
- The media unload plug can be opened/closed without any special tools

Technical data

Model range:	R 150 DL	R 150 DL-2	R 220 DL	R 320 DL	R 420 DL	R 1500 DL
Total bowl volume (l)	190	200	370	700	1,050	2,480
A – Outer diameter max. (mm)	1,000	830	1,080	1,354	1,634	2,226
B – Inner diameter (mm)	700	700	948	1,160	1,440	2,000
C – Height of processing bowl	500	545	530	665	650	790
D – Machine height - upper edge of processing bowl (mm)	1,070	1,305	1,405	1,645	1,580	1,885
E – Height of media unload plug (mm)	455	700	700	820	660	970
Connected load (kW)	0.75	4.4	3.0/5.0	7.5	7.5	12.5

Please contact us for additional technical data and specifications

COMBINED WASHING/DRYING SYSTEM WTA

For multiple finishing stages in one single process

The **fully automatic** compact vibratory finishing system combines **part-on-part mass finishing and washing steps** into one single process. This allows to run several process stages like mass finishing, rinsing and drying in one single operation without the need for unloading and reloading of the work pieces. Ideal for treating **small, mass-produced parts**, but also suitable for **delicate work pieces**.

Rösler
washing / drying system R 125 WTA

Technical details

Processing/Washing unit

- Variable speed of the vibratory drive with frequency inverter
- Special process water extracting units
- Exhaust suction pump P9
- Special cover for the processing bowl

Drying unit

- Drying of the work pieces in the processing bowl with hot air
- Effective drying of the work pieces through special air duct at the cleaning and drying unit
- Hot air blower with temperature sensor and digital temperature display
- Special discharge unit for condensed process water

Extras

- Acid proof machine design for pickling processes
- A high degree of automation possible

Technical data

Model range:	R 125 WTA	R 220 WTA	R 320 WTA
Total bowl volume (l)	70	150	180
Outer diameter max. (mm)	910	1,210	1,352
Width of processing channel (mm)	211	257	333
Overall length of processing channel (mm)	1,895	2,612	2,843
Height of processing bowl (mm)	1,137	1,080	1,227
Work piece discharge height (mm)	504	493	581
Heating power (kW)	25.0	25.0	25.0
Connected load (kW)	28.0	31.0	33.0

Please contact us for additional technical data and specifications

2- AND 3-BATCH SYSTEMS

Fully automatic rotary vibrators

The processing of **mass produced small parts** poses special challenges for the finishing equipment. For example, the mixing of batches with different work pieces and the carry-out of media (either loose or lodged in the work pieces) must be prevented. A reliable, well performing undersize media discharge system is also an indispensable feature of modern equipment designs.

The advantages of multi batch systems

2- and 3-batch systems maximize the productive equipment times by simultaneously running the finishing and separation stages:

- Fully automatic external separation of the finished work pieces from the processing media
- Prevents the mixing of batches with different work pieces
- Integrated work piece wash/rinse station
- Integrated media return system
- Can be easily adapted to complex separation tasks
- Precise dosing of the finished work pieces to the separation station and subsequent post processing systems

The 2-batch system

- Parallel finishing of two batches
- Two completely separate work piece and media batches
- Key components:
  - Parts loading system
  - Rotary vibrator (finishing unit)
  - Batch buffer
  - Independent external separation station
  - Media buffer and media return system
- Minimization of unproductive equipment times

The 3-batch system

- Parallel finishing and separation of three batches
- Simultaneous finishing of two work piece batches and separation of a third batch
- Key components: Tandem system (consisting of 2 rotary vibrators), independent separation station
- Alternating use of the separation station by the two rotary vibrators
- Minimization of unproductive equipment times

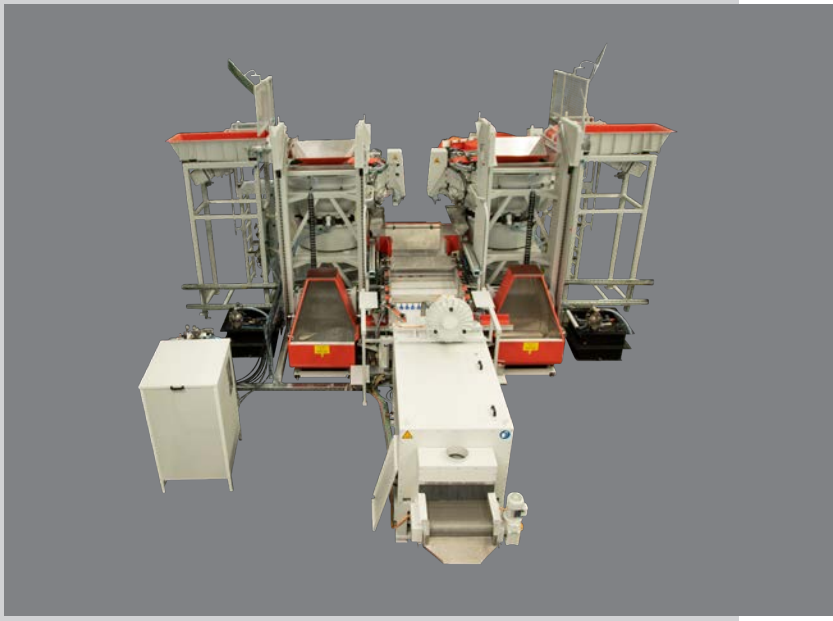

To achieve optimal finishing results, our multi batch systems are custom engineered to the individual customer requirements.

SEPARATION SYSTEMS

Successful and reliable mass finishing solutions rely on well-designed separation technology. Screen separation systems are the most common method to safely separate the finished work pieces from the processing media. For this purpose, the media must be carefully matched to the work pieces. In case of small to midsize ferro-magnetic work pieces, magnetic separation is possible.

Screen versions

Separation screens are available many different versions and sizes:

- **Hole screens**
  - Perforated plastic plate
  - Perforated plastic plate with 45° holes
- **Wire mesh screens**
  - Stainless steel
  - Coated with polyurethane
- **Bar screens, profiled and slitted screens**
  - Bar screen (stainless steel)
  - Milled plastic screen
  - Slotted plastic screen

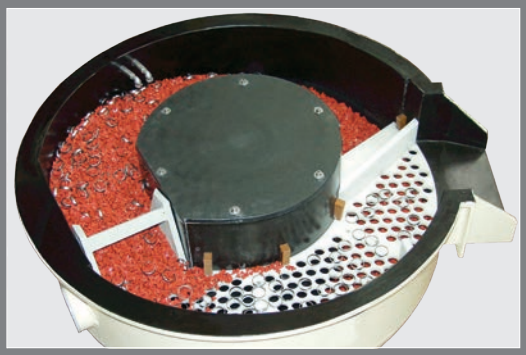

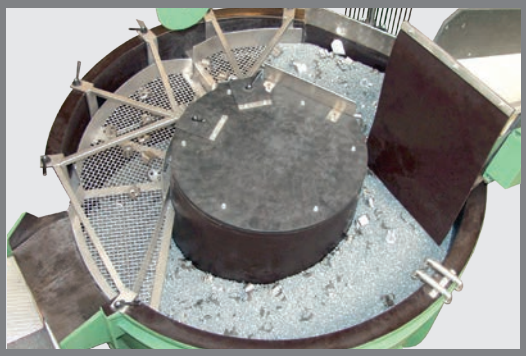

Special separation methods

- **Reverse screening:**
  If the size of the processing media must be bigger than the work piece size, the separation can take place with a reverse screening unit.
- **Separation with tumbling steps:**
  In case of cup-shaped work pieces, tumbling steps on the separation unit help to completely remove the media from the work pieces, preventing media carryout.
- **Separators with linear electric drive:**
  Separation units with linear drive allow the gentle separation of the media from delicate work pieces.

EXTRAS

Process water drains

- Required for creating consistent finishing results
- Combined media unload and process water drain plug (main process water drain)
- Additional drains are recommended for special finishing processes requiring a complete drainage of the process water from the processing bowl (Keramo-Finish®, ball burnishing, REM/ISF®)

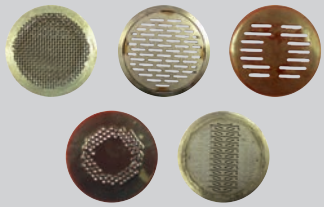

Undersize media classification (discharge)

- Prevents undersize media from lodging in the work pieces
- Continuous undersize media discharge through the media unload plug: Undersize media are discharged during the entire finishing and separation stage
- Periodic undersize media discharge with a special screen segment: Undersize media are only discharged during the separation stage

Bottom unload plug

- Complete unloading of the processing bowl after part-on-part processing or for separation of the finished work pieces from the media in an external separation unit
- Manual unload plug
- Hydraulically or pneumatically activated unload plug

"Paddle wheel" dividers for processing work pieces without part-on-part contact

- The paddle wheel divides the processing bowl into separate chambers
- Each chamber contains one work piece
- Stationary paddle wheels
- Rotating paddle wheels

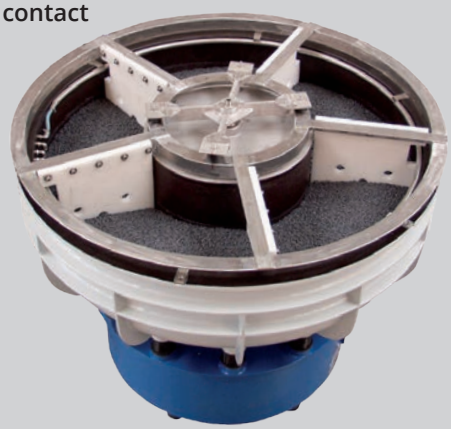

MAGNETIC SEPARATION

The possibility to magnetically separate ferro-magnetic work pieces of different shapes and sizes from the media provides many mass finishing operations with a significant boost in efficiency, performance and operational comfort. Magnetic separators allow the complete separation of the media from the work pieces.

For rotary vibrators, model range A

MS/E-V high performance magnetic separator

The angled magnetic head and the permanent magnetic field with pulsating poles (anti poles) facilitates the release of trapped media in the work piece pickup area. This, in combination with height and magnetic force adjustment, allows a fully automatic discharge of the finished work pieces.

Technical details

- The discharge width equals the full width of the processing channel
- Special belt design to prevent parts from getting caught
- Side plates at the magnetic head made from stainless steel
- Magnetic force adjustment in the work piece pickup area
- Pneumatic height adjustment
- Different transport belt designs available
- Plate de-magnetizing zone

Extras

- Variable belt speed
- Customized de-magnetization solutions
- Height and magnetic force adjustment

Recommended

- Speed control of the rotary vibrator

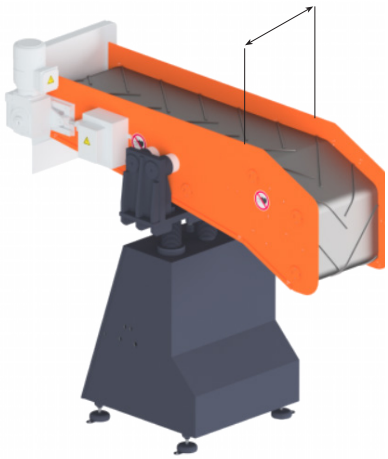

Model range:	Belt width (mm)
R 780 MS/E-V	480
R 1050 MS/E-V	480

For trouble-free downstream manufacturing operations, magnetic work piece separation ALWAYS REQUIRES an effective de-magnetization system!

De-magnetization versions:

- Plate de-magnetizing solutions (integral part of the MS/E-V and MS/E belt magnetic separators)
- Rotary drum magnetic separators (optionally available with basic de-magnetization system)
- Special solutions (tunnel de-magnetization or conveyor belts with one or two de-magnetization plate zones)

For rotary vibrators, model range EC and Euro

MS/E magnetic separator

The angled magnetic head and the permanent magnetic field with pulsating poles (anti poles) facilitates the release of trapped media in the work piece pickup area.

Technical details

- Electromagnetic drum with variable magnetic force
- Different transport belt designs available
- Special belt design to prevent parts from getting caught
- Side plates at the magnetic head made from stainless steel
- Plate de-magnetizing zone
- Pneumatic height adjustment

Extras

- Variable belt speed
- Drum with permanent magnet (in the work piece pickup area)
- Customized de-magnetization solutions

Recommended

- Speed control of the rotary vibrator

TRM drum magnetic separator

Rotary drum magnetic separators can be quickly installed in rotary vibrators equipped with an internal separation screen.

Technical details

- Height adjustment by electric motor
- Variable drum speed
- Stainless steel drum equipped with an anti-adhesion polyurethane coating

Extras

- Built-in basic de-magnetization
- Entire drum magnetic separator movable on wheels
- Magnetic drum can be tilted horizontally

Recommended

- Speed control of the rotary vibrator

ELECTRICAL CONTROLS AND DOSING TECHNOLOGY

Electrical controls

Rotary vibrators are used for different applications. Therefore, the electrical controls must be adapted to the respective operational requirements. In close communication with the dosing unit the electrical control panels allow easy control and monitoring of all machine functions. Use of the latest PLC technology allows easy interlinking with preceding and subsequent manufacturing operations.

Control panel

- All control panels made in-house
- PLC controls allow fully automatic processing
- Equally suitable for multi-step mass finishing processes including Keramo-Finish®
- Control panels can be equipped for communication with interlinked systems
- Linking modules for fresh water operation or process water recycling

Extras

- Remote trouble shooting via remote access point
- Monitoring and display of all process parameters in real time

Dosing technology

Optimal process water supply is a pre-condition for quickly and consistently achieving high quality finishing results. In this respect, process water recycling systems are an environmentally sustainable and cost-efficient alternative. They not only save water and decrease operational costs, but they represent also a valuable contribution towards protecting the environment and your sustainability efforts.

Dosing system versions

- Dosing systems for finishing operations using fresh water
- Dosing systems for finishing operations with process water recycling
  - For process water recycling systems (water containing solid fines)
  - Available with or without water flow meter
- Work piece cleaning
  - Spray and rinse stations
  - For cleaner work pieces during and after the mass finishing process
  - Can be switched on for individual stages of the finishing process
- Automatic dosing of liquid grinding and polishing pastes
  - Automatic dosing in programmable time intervals
  - Consistent, repeatable finishing results
  - Minimal operator interaction required

NOISE PROTECTION SYSTEMS

Noise protection measures create a comfortable working environment. The noise emission of vibratory mass finishing systems depends on the machine size, the processing intensity, the shape and size of the processing media and the work pieces. Without noise protection the noise levels are typically around 80 to 95 dB(A) and can reach peak levels as high as 140 dB(A).

Noise absorbing lids

- Effective reduction of the noise level with hinged noise absorbing lids
- Manual operation, supported by gas springs
- Pneumatic operation, alternatively, operation by electric motor

Noise absorbing cabins

- Complete enclosure significantly reduces the noise level
- The ideal solution for interlinked, automated mass finishing systems
- Easy access for cleaning, maintenance and inspections

Splash guard lid

- Prevents the processing liquid from splashing into the immediate environment
- Recommended for ball burnishing processes
- Very effective in combination with a suction pump and speed control of the rotary vibrator

The complete noise protection

- Noise absorbing lid and noise absorbing machine housing
- The ideal noise protection for tight spaces

MAXIMUM EFFICIENCY THROUGH AUTOMATION

The efficiency of mass finishing operations increases dramatically with fully automatic work piece handling, including loading/unloading and post treatment operations. We offer highly flexible, modular work piece handling solutions, that allow the interlinking and automation of all process stages.

Rotary vibrator with automatic loading, magnetic separation and drying of the work pieces

Complete discharge of the media/work piece mix with unload plug, external separation with drum magnetic separator and post treatment in rotary dryer

Automatic batching and loading of the work pieces, mass finishing process with subsequent vibratory rinse-cleaning of the finished work pieces

Rotary vibrator with subsequent conveyor belt washing installation and hot air belt dryer

Customized solutions

The integration of rotary vibrators into fully automatic manufacturing lines is one of Rösler strength. 90 percent of the mass finishing systems we build in our plants, represent custom-engineered solutions. In a first step we carefully analyze the finishing task, the required work piece handling and the desired degree of automation. Based on this analysis, we are selecting the most suitable work piece loading/unloading and transport systems, the best mass finishing equipment, processing media and process water cleaning method. Today the demands for shorter cycle times and more consistent, repeatable finishing results make the use of robots and sophisticated handling systems indispensable. The engineering and production of special work piece fixtures takes place in close cooperation with our customers.

CUSTOMER EXPERIENCE CENTER
MASS FINISHING

A major strength of the Rösler business approach is that **we look at all aspects of a finishing task**. The equipment and the processes are individually tailored to the respective finishing requirements, but also to their optimal integration into the customer's manufacturing operation. Most of the Rösler sales branches have their own **Customer Experience Centers (CEC)**, equipped with the latest finishing equipment.
To investigate the various finishing possibilities, in our CEC we are conducting **processing trials** with the work pieces of our respective customers.

Process development and process optimization

Our all-around approach guarantees perfect finishing solutions. This includes processing trials, process development, selection of the right machinery and a professional after sales service.
In our CEC, equipped with ultra-modern equipment, we can run practically any mass finishing process.

State-of-the-art **physical and chemical measuring** equipment represents a vital tool for process development and optimization.
The entire focus of our specialists in the engineering and R & D departments is on developing **tailormade finishing solutions**.

Product development and optimization

The enormous depth of the Rösler product range, CEC around the world and our well-equipped laboratory at the Untermerzbach location in Germany are an excellent basis for the development of innovative and cost-efficient products in the field of mass finishing.
All our products, be it consumables, finishing equipment, vibratory motors, process water cleaning centrifuges, as well as work piece handling systems and post processing equipment like dryers, are **developed and manufactured** in-house. Such a high manufacturing depth is unparalleled in our industry.

LEARNING FROM THE GLOBAL LEADER

Our comprehensive mass finishing knowhow is founded on over 80 years of experience. As the global technology and market leader in the field of surface treatment we can offer proven solutions ranging from a broad equipment and consumables portfolio to round-the-clock after-sales service. In our training seminars we are passing our extensive knowledge on to you.

Rösler Academy

The central training center of the Rösler Oberflächentechnik GmbH

- An area of more than 1,350 m² for learning and working
- Equipped with the latest digital media and communication technologies
- Certified professional trainers
- Specialized fields: Mass finishing, shot blasting, lean management
- More than 10 different training seminars
- Focus on hands-on learning
- Training seminars in German and English
- Customized training seminars at customer locations upon request

Our professional trainers

All our trainers are certified and are among the best in their respective fields. In our training seminars you will benefit from the extensive experience of our trainers, who will provide you with first-hand practical knowledge.

Ø Participants per year	Ø Rating	Ø Recommendation rate
Over 1,000	★★★★★ 9.6 out of 10 possible points[1]	99 %[1]

[1] Source: Evaluation questionnaires filled out by participants, Status 31/12/2022

You can find more information about our seminars, dates and registration procedures under www.rosler-academy.com.

RÖSLER
finding a better way ...

Mass Finishing

Shot Blasting

AM Solutions

www.rosler.com

Germany

Rösler Oberflächentechnik GmbH
Werk Memmelsdorf
Vorstadt 1
D-96190 Untermerzbach
Tel.: +49 9533 / 924-0
Fax: +49 9533 / 924-300
info@rosler.com

Rösler Oberflächentechnik GmbH
Werk Hausen
Hausen 1
D-96231 Bad Staffelstein
Tel.: +49 9533 / 924-0
Fax: +49 9533 / 924-300
info@rosler.com

USA

Rösler Metal Finishing USA, L.L.C.
1551 Denso Road
USA-Battle Creek
MI 49037
Tel.: +1 269 / 4413000
Fax: +1 269 / 4413001
rosler-us@rosler.com

France

Rösler France
Z.I. de la Fontaine d'Azon
CS 50513 – St. Clément
F-89105 Sens Cedex
Tel.: +33 3 / 86647979
Fax: +33 3 / 86655194
rosler-fr@rosler.com

Italy

Rösler Italiana S.r.l.
Via Elio Vittorini 10/12
I-20863 Concorezzo (MB)
Tel.: +39 039 / 611521
Fax: +39 039 / 6115232
rosler-it@rosler.com

Switzerland

Rösler Schweiz AG
Staffelbachstraße 189
Postfach 81
CH-5054 Kirchleerau
Tel.: +41 62 / 7385500
Fax: +41 62 / 7385580
rosler-ch@rosler.com

Spain

Rösler International GmbH & Co. KG
Sucursal en España
Polg. Ind. Cova Solera C/Roma, 7
E-08191 Rubí (Barcelona)
Tel.: +34 93 / 5885585
Fax: +34 93 / 5883209
rosler-es@rosler.com

Netherlands

Rösler Benelux B.V.
Reggestraat 18
NL-5347 JG Oss
Postbus 829
NL-5340 AV Oss
Tel.: +31 412 / 646600
Fax: +31 412 / 646046
rosler-nl@rosler.com

Belgium

Rösler Benelux B.V.
Avenue de Ramelot 6
Zoning Industriel
B-1480 Tubize (Saintes)
Tel.: +32 2 / 3610200
Fax: +32 2 / 3612831
rosler-be@rosler.com

Austria

Rösler Oberflächentechnik GmbH
Hetmanekgasse 15
A-1230 Wien
Tel.: +43 1 / 6985180-0
Fax: +43 1 / 6985182
rosler-at@rosler.com

Romania

Rösler Romania SRL
Str. Avram Iancu 39-43
RO-075100 Otopeni/ILFOV
Tel.: +40 21 / 352 4416
Fax: +40 21 / 352 4935
rosler-ro@rosler.com

Russia

Rösler Russland
Borovaya Str. 7, bldg. 4, office 107
111020 Moscow
Tel. / Fax: +7 495 / 247 55 80
rosler-ru@rosler.com

Great Britain

Rösler UK Ltd.
Unity Grove, School Lane
Knowsley Business Park
GB-Prescot, Merseyside L34 9GT
Tel.: +44 151 / 4820444
Fax: +44 151 / 4824400
rosler-uk@rosler.com

Brazil

Rösler Otec do Brasil LTDA
Av. Antonio Angelo Amadio, 1421
Centro Empresarial Castelo Branco
18550-000 Boituva
São Paulo - Brasil
Tel.: +55 15 / 3264-1117
Tel.: +55 15 / 3264-1112
info@rosler-otec.com.br

China

Rosler SURFACE-TECH (BEIJING) CO., LTD.
Beijing Office
Fu Hua Mansion, Office A-11-K
No. 8, Chao Yang Men North Avenue
Beijing 100027, P.R China
Tel.: +86 10 / 6554 73 86
Fax: +86 10 / 6554 73 87
rosler-cn@rosler.com

and over 150 additional distributors around the world

Find your contact

Publ.-Nr.: EN.145.22 – Revision: 04/2023 – We reserve the right for changes of the contents.